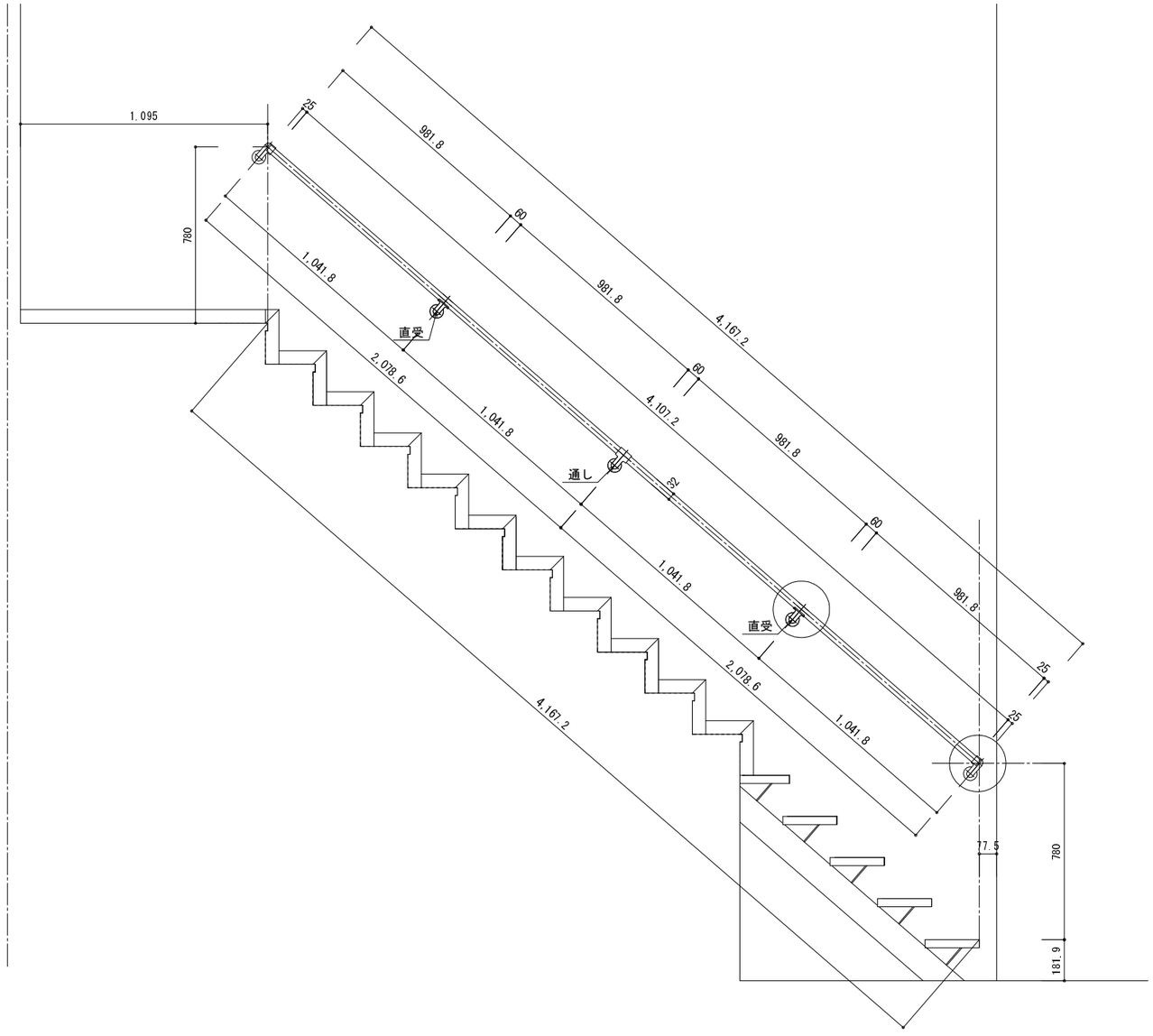
1,095
780
25
981.8
60
1,041.8
直受
2,078.6
4,167.2
4,107.2
通し
77.5
181.9

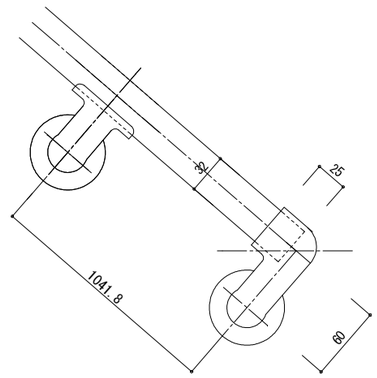
25
1041.8
60